A Fuel Cell Guide

REGULATIONS, CODES, AND STANDARDS FOR THE DEPLOYMENT OF STATIONARY FUEL CELLS

A TIA REFERENCE GUIDE

tiaonline.org

IMPORTANT NOTICE

The purpose of this *Reference Guide* is to provide an overview of regulations, codes, standards, permitting processes, fuel supply considerations, information, and technologies relating to the deployment of stationary fuel cells. It is a reference tool designed to complement other tools and sources of information available to users.

This document is for information purposes only. The reader should not make deployment or maintenance decisions based on the information contained herein. A reader is encouraged to carefully study source materials related to the implementer's unique deployment conditions, and as necessary consult with experts and government regulators. This document is not a standard and is merely providing to a reader access to information that may be acquired from other sources.

Members of the Telecommunications Industry Association (TIA) Fuel Cell Focus Group developed the *Reference Guide* over a period of two years based on their expertise, work experience and industry networks. It is a good faith effort to develop a comprehensive, accurate guide but it not designed to be the sole, definitive source of all information relating to the deployment of stationary fuel cells. Users should view the information from the perspective of their unique situations, and determine independently whether the cited regulations, standards, and related documents are the most current versions. The usefulness of the *Reference Guide* depends on the users' understanding that although every effort was made to ensure that the Reference Guide is accurate, there are no guarantees. The information will need to be reviewed and updated with the passage of time. In addition, at times the opinions of the authors are expressed and should be viewed as opinions rather than statements of fact.

TIA Fuel Cell Focus Group

TIA created an exploratory Focus Group on Fuel Cell Standards for Wireless and Information and Communication Technology (ICT) Infrastructure in 2013. The goal was to provide a forum for fuel cell companies, mobile network operators, cell site leasing companies, engineering firms, government entities, and others to develop a document that can provide the ICT industry with a broad reference guide on stationary fuel cell deployment in support of wireless and other ICT infrastructure.

TIA thanks the following companies and organizations for their contributions to this document:

- Air Liquide
- Air Products & Chemicals
- Altergy Systems
- Ballard Power Systems
- BNC Energy, LLC
- BTI/Fuel Cells 2000
- Burns & McDonnell
- ClearEdge Power
- CommScope
- Department of Energy
- Fuel Cell and Hydrogen Energy Association
- Hy9 Corpration
- IGX Group, Inc.
- Microsoft Corporation
- National Renewable Energy Laboratory
- ReliOn
- Serenergy
- Trulite, Inc.
- U.S. Department of Transportation

TIA

The Telecommunications Industry Association (TIA) represents manufacturers and suppliers of global communications networks through standards development, policy and advocacy, business opportunities, market intelligence, and events and networking. TIA enhances the business environment for broadband, mobile wireless, information technology, networks, cable, satellite and unified communications. Members' products and services empower communications in every industry and market, including healthcare, education, security, public safety, transportation, government, the military, the environment, and entertainment. Visit tiaonline.org for more details.

Stationary Fuel Cells

Table of Contents

(Click on listing to go to location)

Stationary Fuel Cells

1 Introduction

The purpose of this document is to support the deployment of fuel cells by identifying regulatory requirements and providing information on fuel supplies, permitting, and other procedures that would assist a project developer. The guide may also be helpful to other parties involved in project deployment, such as:

- Equipment manufacturers
- Fuel suppliers
- Code officials
- Municipal planners
- Emergency responders.

This document is the first in a set of two. The second document is a users guide for deployment of stationary fuel cells and will be focused more on guidance for operating stationary fuel cells, as opposed to codes and standards compliance.

This document covers the following topics:

- Basic systems structure
- Overview of codes and standards and generally applicable codes and standards
- Fuel supply considerations
- Permitting processes, including a detailed overview of codes and standards
- Reserved sections for such topics as an Emergency Response Plan and Standards Permits

The TIA Fuel Cell Focus Group, which authored this document, had extensive discussions about the user's needs and how they could best be addressed. These discussions led to the creation of a lengthy section on fuel supply considerations.

The intent is that this will be a living document and that as deployment progresses, these sections will provide the necessary information.

2 Basic Schematic Showing Equipment and Purpose of Equipment

Figure 1 shows a basic fuel cell system. The key components of the system are as follows:

- Fuel
- Fuel cell
- Battery (provides reserve power)
- DC bus
- Rectifier (converts direct current [DC] to alternating current [AC])
- AC distribution.

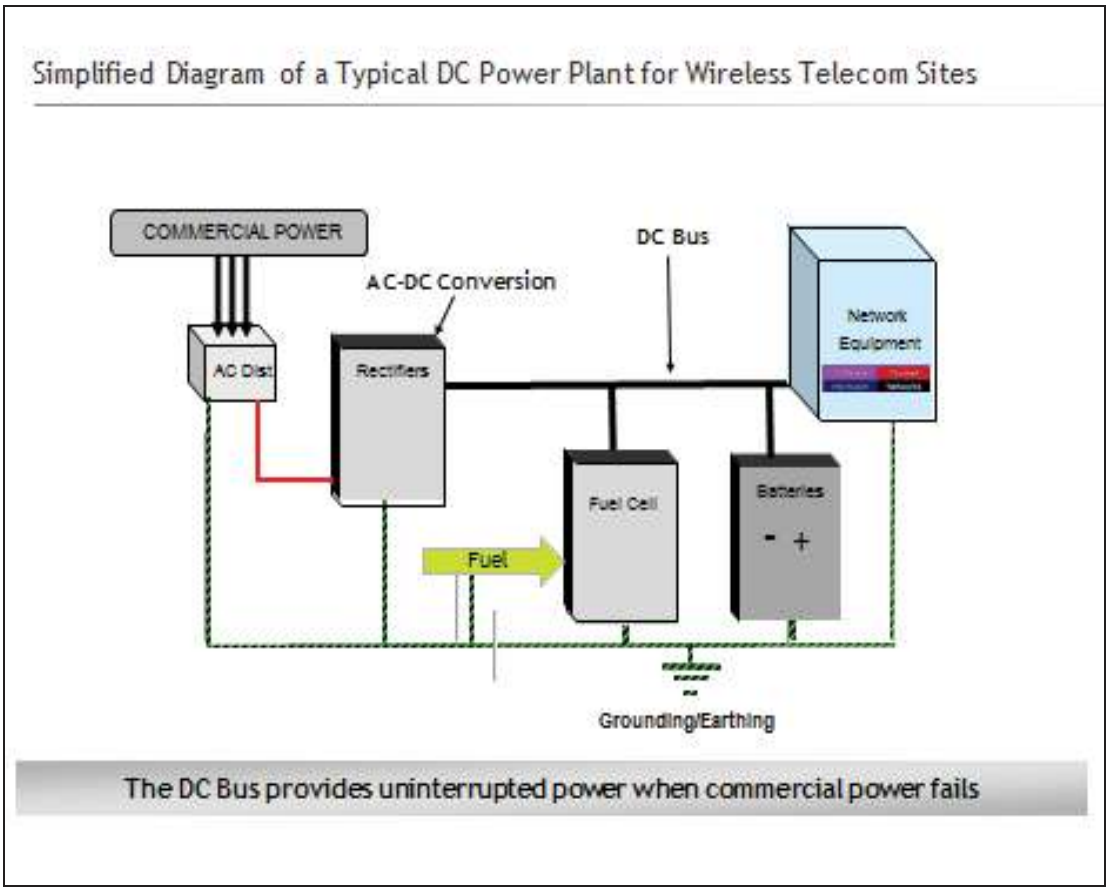

Figure 1. Basic system schematic

Graphic courtesy Anil Trehan, CommScope

3 Summary Codes and Standards Sheet

3.1 Relevant Documents for Compliance – Mandated by Code or Law

1)	ANSI/CSA FC1	Standard for Stationary Fuel Cell Power Systems (2014 edition)
2)	ANSI/CSA America FC 3	Standard for Portable Fuel Cell Power Systems (2004 edition, reaffirmed 2017)
3)	IFC	International Fire Code (2014 edition most recent; prior editions are still enforced)
4)	NFPA 30	Flammable and Combustible Liquids Code (2012 edition)
5)	NFPA 54	National Fuel Gas Code (2015 edition)
6)	NFPA 55	Compressed Gases and Cryogenic Fluids Code (2016 edition; prior editions are still enforced)
7)	NFPA 70®	National Electrical Code® (2017 edition)
8)	NFPA 853	Installation of Stationary Fuel Cell Power Systems (2015 edition)
9)	29CFR1910	Occupational Safety and Health Administration (OSHA)
10)	47CFR15	Federal Communications Commission (FCC)
11)	49CFR172	Department of Transportation (DOT)

3.2 Other Referenced Documents for Compliance

1)	ASME/ANSI B31.3	Process piping
2)	ANSI/IEC 60529	Degrees of protection provided by enclosures
3)	ANSI Z21.21/CSA 6.5	Standard for automatic valves for gas appliances with distributed energy resources
4)	ASTM E 108	Standard test methods for fire tests of roof coverings
5)	IBC	International Building Code
6)	IMC	International Mechanical Code
7)	NFPA 2	Hydrogen Technologies Code (2016 edition) – see NFPA 2 note

8) NFPA 24	Standard for the installation of private fire service mains and their appurtenances
i9) NFPA 80	Standard for fire doors and other opening protectives
10) NFPA 90A	Standard for the installation of air-conditioning and ventilating systems
11) NFPA 101®	Life Safety Code
12) NFPA 220	Standard types of building construction
13) NFPA 251	Standard methods of tests of fire resistance of building construction and materials
14) UL 991	Standard for tests for safety-related controls employing solid-state devices
15) UL 429	Electrically operated valves
16) UL 790	Standard test methods for fire tests of roof coverings
17) UL1741	Standard for inverters, converters, controllers, and interconnection system equipment for use
18) IFGC	International Fuel Gas Code

4 Generally Applicable Codes and Standards

4.1 Organizations

1) ANSI – American National Standards Institute
   Responsible for approval of U.S. standards

2) ASTM – ASTM International
   Standards writing organization for materials testing

3) CSA – Canadian Standards Association
   A Nationally Recognized Test Laboratory and standards writing organization

4) FCC – Federal Communications Commission CSA Group, including CSA America
   Responsible for control and use of radio frequency (RF) spectrum
   FCC regulations for controlling and limiting equipment RF emissions are part of the Code of Federal Regulations, Title 47, Part 15 (47CFR15) – Radio Frequency Devices

5) ICC – International Code Council
   International standards writing organization

6) IEC – International Electrotechnical Committee
   International standards writing organization

7) OSHA – Occupational Safety and Health Administration
   Part of the United States Department of Labor
   OSHA regulations are part of the Code of Federal Regulations, Title 29, Part 1910 (29CFR1910)

8) NFPA – National Fire Protection Association
   United States national standards writing organization

9) UL – Underwriters Laboratories, Inc.
   A Nationally Recognized Test Laboratory and standards writing organization

4.2 Relevant Documents for Compliance – Mandated by Code or Law

1)	ANSI/CSA FC1	Standard for Stationary Fuel Cell Power Systems (2014 edition)
2)	ANSI/CSA America FC 3	Standard for Portable Fuel Cell Power Systems (2004 edition, reaffirmed 2017)
3)	IFC	International Fire Code (2015 edition most recent; prior editions are still enforced)
4)	IFGC	International Fuel Gas Code (2015 edition most recent; prior editions are still enforced)
5)	NFPA 30	Flammable and Combustible Liquids Code (2015 edition)
6)	NFPA 54	National Fuel Gas Code (2015 edition)
7)	NFPA 55	Compressed Gases and Cryogenic Fluids Code (2016 edition; prior editions are still enforced)

8) NFPA 70® National Electrical Code® (2017 edition)

9) NFPA 853 Installation of Stationary Fuel Cell Power Systems (2015 edition)

10) 29CFR1910 Occupational Safety and Health Administration (OSHA)

11) 47CFR15 Federal Communications Commission (FCC)

12) 49CFR172 Department of Transportation (DOT)

4.3 Other Referenced Documents for Compliance

1) ASME/ANSI B31.3 Process piping

2) ANSI/IEC 60529 Degrees of protection provided by enclosures (IP Code)

3) ANSI Z21.21/CSA 6.5 Standard for automatic valves for gas appliances with distributed energy resources

4) ASTM E 108 Standard test methods for fire tests of roof coverings

5) IBC International Building Code

6) IMC International Mechanical Code

7) NFPA 2 Hydrogen Technologies Code (2016 edition) – see **NFPA 2 note**

8) NFPA 24 Standard for the installation of private fire service mains and their appurtenances

9) NFPA 80 Standard for fire doors and other opening protectives

10) NFPA 90A Standard for the installation of air-condi tioning and ventilating systems

11) NFPA 101® Life Safety Code®

12) NFPA 220 Standard types of building construction

13) NFPA 251 Standard methods of tests of fire resistance of building construction and materials

14) UL 991 Standard for tests for safety-related controls employing solid-state devices

15) UL 429 Electrically operated valves

16) UL 790 Standard test methods for fire tests of roof coverings

17) UL1741 Standard for Inverters, Converters, Controllers, and Interconnection System Equipment for Use With Distributed Energy Resources

Fuel cell power systems and their fuel supplies must meet a number of compliance requirements for safe and legal operation. Below is a detailed list of compliance requirements for the power system and fuel supplies, covering hydrogen gas (H_2), liquid hydrogen, biogas (e.g., methane and hydrogen mix), and liquid fuels (e.g., methanol).

This list is not intended to replace existing code; consult referenced standards for exact language and requirements.

4.4 Order of Precedence for Code Compliance

1) Code of Federal Regulations; specifically, OSHA (Title 29), FCC (Title 47), DOT (Title 49)
2) State government-approved safety and design codes – typically adopted from International Code Council (ICC); these include the International Fire Code (IFC), International Fuel and Gas Code (IFGC), International Building Code (IBC), etc.
3) State-, county-, or local municipality-approved standards or codes
4) ANSI-approved standards invoked by CFR, state, or local codes; including NFPA, ASME, UL, etc.

NFPA 2 note: NFPA 2 is a comprehensive document which consolidates hydrogen requirements from other key NFPA codes and standards, including NFPA 1, 55, 853, etc, as a single source document for hydrogen safety requirements. NFPA 2 is currently adopted as law in California and being considered by other state legislatures; however, NFPA 2 requirements may be invoked by a local AHJ at its discretion.

4.5 Codes and Standards Relevant for Fuel Cell Power Systems—Power Generator

1)	47CFR15	Federal Communication Commission (FCC)
2)	ANSI/CSA FC1	Standard for Stationary Fuel Cell Power Systems (2014 edition)
3)	ANSI/CSA America FC3	Standard for Portable Fuel Cell Power Systems (2004 edition, reaffirmed 2017)
4)	NFPA 70®	National Electrical Code® (2017 edition)
5)	NFPA 853	Installation of Stationary Fuel Cell Power Systems (2015 edition)

4.6 Codes and Standards Relevant for Fuel Storage

1)	29CFR1910	Occupational Safety and Health Administration (OSHA)
2)	49CFR172	Department of Transportation (DOT)
3)	IFC	International Fire Code (2015 edition most recent; previous editions are still enforced)
4)	IFGC	International Fuel Gas Code (2015 edition most recent; prior editions are still enforced)
5)	NFPA 30	Flammable and Combustible Liquids Code (2015 edition)
6)	NFPA 54	National Fuel Gas Code (2015 edition)
7)	NFPA 55	Compressed Gases and Cryogenic Fluids Code (2016 edition; prior editions are still enforced)
8)	NFPA 853	Installation of Stationary Fuel Cell Power Systems (2016 edition)

4.7 International Fire Code (IFC) – Implementation by State Governments

Enacted as state and/or local law, versions (released by date) adopted by each state (as of May 2016):

1) IFC2015 - 2015 edition: AL, CO, LA, MI, MS, MO, MT, ND, NE, NH, NJ, NY, OK, TX, WA, WI, WY

2) IFC2012 – 2012 edition: AZ, AR, CA, DE, D.C., GA, ID, IN, KY, MN, NV, OR, SC, UT, VA

3) IFC2009 – 2009 edition: AK, IL, IA, NC, OH, PA, SD

4) IFC2006 – 2006 edition: KS, TN

4) IFC2003 – 2003 edition: CT, NM

4.8 International Fuel and Gas Code (IFGC) – Implementation by State Governments

Enacted as state and/or local law, versions (released by date) adopted by each state (as of May 2016):

1) IFGC2015 - 2015 edition: AL, CO, DE, IA, KS, MD, MS, NE, NV, NJ, NM, NY, OK, SD, TN, TX, WA, WV, WY

2) IFGC2012 – 2012 edition: AZ, D.C., FL, GA, ID, IN, LA, MI, MN, MT, ND, OR, RI, SC, UT, VA

3) IFGC2009 – 2009 edition: AK, IL, NC, OH, PA, WI

3) IFGC2006 – 2006 edition: AR

4) IFGC2000 – 2000 edition: MO

4.9 General Requirements – Common to Compressed Gas Fuels

4.9.1 Container Types, Design and Storage Construction

4.9.1.1 Fuel Storage Containers – [29CFR1910.101]

- Inspection of compressed gas cylinders "...Visual and other inspections shall be conducted as prescribed in the Hazardous Materials Regulations of the Department of Transportation (49 CFR Parts 171-179 and 14 CFR Part 103). Where those regulations are not applicable, visual and other inspections shall be conducted in accordance with Compressed Gas Association Pamphlets C-6-1968 and C-8-1962...." [29CFR1910.101(a)]
- Compressed gases. "The in-plant handling, storage, and utilization of all compressed gases in cylinders, portable tanks, rail tank cars, or motor vehicle cargo tanks shall be in accordance with Compressed Gas Association Pamphlet P-1-1965...." [29CFR1910.101(b)]

4.9.2 Piping, Valves, Regulators, Fuel Controls

4.9.2.1 Pressure Relief Devices

- Safety relief devices for compressed gas containers. "Compressed gas cylinders, portable tanks, and cargo tanks shall have pressure relief devices installed and maintained in accordance with Compressed Gas Association Pamphlets S-1.1-1963 and 1965 addenda and S-1.2-1963." [29CFR1910.101(c)]
- Pressure relief devices sized and selected per CGA S-1.1, S-1.2, and S-1.3 or the ASME Boiler and Pressure Vessel Code, Section VIII. [IFC2015 5303.3.2]
- "Pressure relief devices shall be arranged to discharge upward and unobstructed to the open air in such a manner as to prevent any impingement of escaping gas upon the container, adjacent structures or personnel.

  Exception: DOTn specification containers having an internal volume of 30 cubic feet (0.855 m^3) or less." [IFC2015 5303.3.4]
- Pressure relief devices protected from freeze [IFC2015 5303.3.5]

4.9.3 Fire and Emergency Response

- Fire suppression required in gas rooms [IFC2015 5003.8.4.1] Note: Gas rooms are used to increase the Maximum Allowable Quantity of stored or used gas in an interior room or building.

5 Fuel Supply Considerations and General Guidance on Site Selection

Fuel cells convert the chemical energy of a fuel to electrical energy. The fuel cell operates as long as fuel is available. Hydrogen is often the chemical energy source for the system; alternatively, hydrogen-carrying substances such as methanol, natural gas, propane, and ammonia can also be used, depending on the fuel cell design. The choice of catalyst in the fuel cell determines whether a given fuel can be used directly or must be processed (reformed) before the core electrochemical reaction takes place. The fuel cell design also determines the operating characteristics, such as start-up time and load-following ability – some designs are better aligned than others to wireless and other critical ICT power requirements.

Compressed hydrogen and liquid methanol are commonly used today by stationary fuel cells for backup power at cellular sites (10 kW or less). The vast majority of deployments are proton exchange membrane (PEM) fuel cells that require pure hydrogen, which can be supplied directly or reformed (e.g., from methanol) on site. Direct methanol fuel cell (DMFC) technology is also used today for backup power, but in smaller numbers. As the name suggests, DMFC technology is designed to use methanol directly without a reformer. Natural gas is used today in larger prime power fuel cell power plants (100 kW or more, e.g., for large servers), and both natural gas and propane are used by micro-combined heat and power (CHP) fuel cells. Smaller (5 kW or less) solid oxide fuel cell (SOFC) technology, used mainly in prime power applications, can flexibly accept any of the fuels mentioned above. Natural gas, propane, and ammonia fuel cells for telecom backup power are in active development.

The fuels chosen for the scope of this document are hydrogen, methanol, natural gas, and propane, based on the applicability of fuel cells that use these fuels for wireless and other critical ICT infrastructure and on availability of commercial products.

5.1 Hydrogen

Hydrogen is the most abundant element in the universe, but stable molecular hydrogen gas is rare on Earth because it is so diffusive and buoyant (characteristics that also make it a safe fuel). Hydrogen is found abundantly in many chemical compounds (e.g., water), and is easily manufactured from feedstock fuels such as methane. It is also often produced as a by-product of chemical processes and can be created as a form of renewable energy through electrolysis and reformation of biogas. Hydrogen fuel cells have the simplest design, but there is a tradeoff with fuel logistics, as hydrogen is often stored and transported at high pressure. Fuel cells typically require a hydrogen purity of 99.95 percent, which is commercially available.

5.1.1 Sources

In addition to being a source of energy, hydrogen is used in a number of industries today: float glass manufacturing, metal production and welding, chemicals, refining, automotive and transportation equipment, and aerospace and aircraft. The primary source of hydrogen for these industries is industrial gas companies, and several other available options are listed below.

5.1.1.1 Industrial Gas Companies

Industrial gas companies are well represented across the continent and have the widest selection of delivery options. Most offer both gaseous and liquid hydrogen. As a compressed gas in smaller quantities, hydrogen can be sourced in a variety of cylinder sizes and bulk packs. For larger quantities, gaseous hydrogen can be delivered in tube trailers. When cooled to liquid form, hydrogen can be transported in tanker trucks and transferred to bulk liquid tanks; however, it needs to be converted to gaseous form before use in fuel cells.

Some of the industrial gas companies supplying hydrogen include Air Liquide, Air Products, Airgas, Linde, and Praxair.

5.1.1.2 Hydrogen Vehicle Refilling Stations

The number of hydrogen refilling stations continues to grow as the infrastructure is being established for hydrogen fuel cell vehicles. In addition to vehicles, these stations could sell hydrogen to anyone who is licensed and equipped to refill hydrogen storage containers.

(a) (b)

Figure 2.
(a) Hydrogen refilling station
(b) close-up of dispensing unit.

Photos courtesy Carl Rivkin

5.1.1.3 Hydrogen Resale by Heavy-Use Industries

In addition to automotive uses, the material-handling industry is becoming a significant consumer of hydrogen as warehouses and industrial facilities migrate from battery-driven and combustion-engine-driven forklift trucks to new hydrogen alternatives. These facilities need to store a sizable amount of fuel—in liquid form if the truck fleet is large enough—and the managers of that fuel could resell some of the hydrogen for backup power, providing an alternate source of revenue.

Figure 3. Hydrogen fuel cell forklift being refueled at warehouse facility.[1]

Photo courtesy Linde

5.1.1.4 Chemical Plants Producing Hydrogen as Waste By-Product

Industrial facilities, such as sodium chlorate, chlor-alkali, and caustic soda plants, often produce massive quantities of by-product hydrogen that potentially can be captured and sold for other purposes, such as fuel cell backup power.

[1] http://www.lindeus.com/en/innovations/hydrogen_energy/hydrogen_energy_applications/forklifts.html

As an example, in India, Aditya Birla Group operates a caustic soda plant in Nagda, Madhya Pradesh. By-product hydrogen from this process is captured, purified, stored in cylinders, and used to power fuel cells in a cellular network operated by IDEA Cellular, part of the Aditya Birla Group.

The IWHUP project featured a Combined Heat and Power fuel cell powered by hydrogen recovered from a nearby sodium chlorate plant.[2]

Figure 4. Waste hydrogen capture facility[3]

Photo courtesy HTEC

5.1.1.5 Gas Pipelines

Hydrogen gas pipelines are often found in oil refinery zones such as in Southern California and Texas. This continuous flow of fuel is ideal for fuel cells that produce high power and/or run continuously.

Figure 5. Section of hydrogen gas pipeline[4]

Photo courtesy Department of Energy

As an example, Toyota Motor Sales USA, Inc., operates a 1.1-MW hydrogen PEM fuel cell at its Sales and Marketing Headquarters in Torrance, California. The fuel cell is used to satisfy peak and mid-peak power needs. The pipeline that provides hydrogen to this fuel cell also supplies a nearby hydrogen fueling station

[2] http://www.americanoilinvestments.com/articles/Oil-Gas-News_4618.html
[3] http://www.htec.ca/#!history/c588
[4] https://www.hydrogen.energy.gov/permitting/pdfs/doe_h2_delivery.pdf

Figure 6. 1.1-MW fuel cell at Toyota Motor Sales USA, Inc., fueled by pipeline hydrogen.[5]

Photo courtesy Ballard Power Systems, Inc.

5.1.1.6 Renewable Sources

Hydrogen can be produced renewably through the electrolysis of water, where electrolysis (and optional compression) is powered by energy sources such as wind, photovoltaic panels, hydropower, biomass, and geothermal.

A few examples of trials of electrolyzer/fuel cell systems are described on this website: http://fuelcellsworks.com/news/2014/07/03/hydrogen-production-systems-provider-acta-s-p-a-announces-commercial-update/.

Although early in its development stage, manufacturing hydrogen from biomass is another alternative for the renewable production of biomass.[6]

5.1.2 Fuel Delivery/Storage Options

Hydrogen is delivered and can be stored as a compressed gas, a liquid, or bonded in matter; however, liquid hydrogen must be gasified before delivery to the fuel cell, and bonded hydrogen must be released, as fuel cells consume hydrogen in gaseous form. Hydrogen is stored as a compressed gas at the point of use.

5.1.2.1 Compressed Gas

Pressure vessels of various sizes, shapes, and composition are used for the transport and storage of compressed hydrogen gas.

In small quantities, steel cylinder tanks are the most common form of delivered gaseous hydrogen, but aluminum tanks are also available. The cylinders can also serve as the storage medium on site and are swapped when empty (or near empty). In this "cylinder swap" case, the cylinder tanks typically remain the property of the fuel supplier, and a monthly rental fee is applied for each cylinder at the purchaser's site. Alternatively, a permanent installation of cylinders on site can serve as the storage medium and is refilled by transferring hydrogen from a delivery vehicle. In this "fill-in-place" scenario, the storage medium is often purchased as a package with the fuel cell.

[5] http://www.ballard.com/about-ballard/newsroom/news-releases/news10171201.aspx.
[6] http://www.hydrogen.energy.gov/pdfs/51726.pdf

(a) (b) (c)

Figure 7.
(a) Steel cylinders installed in a cabinet for individual cylinder service
(b) steel cylinders installed in a cabinet, manifolded together for "fill-in-place" service
(c) sample range of steel cylinder sizes[7]

Photos courtesy of Ballard Power Systems, Inc. (a), Air Products and Chemicals, Inc. (b), and Air Liquide (c)

In larger quantities, compressed hydrogen can be delivered in bulk trailers. Capacities for conventional tube trailers typically range from about 25,000 – 140,000 scf (60 – 330 kg). A variety of advanced high-pressure solutions are now available that can double capacity with the use of composite materials that withstand higher pressures. The trailers can be used to refill onsite storage vessels or can be left on site as a form of storage. A monthly rental fee may apply if the storage asset remains the property of the hydrogen vendor.

(a) (b)

Figure 8.
(a) Conventional steel tube trailer
(b) trailer with 450-bar (6,500-psi) composite cylinder blocks (6 x 89 kg of hydrogen).

Photos courtesy PlugPower (a) and HTEC (b)

As mentioned above, cylinders made of high-strength carbon composite materials enable storage at higher pressure and increase the density of stored hydrogen. These cylinders can be manifolded together in modular bulk packs or installed as individual cylinders into hydrogen cabinets. Carbon-composite cylinders are not a standard offering from hydrogen vendors, so these assets are often purchased rather than rented. Composite cylinders were developed primarily by the automotive industry, which demanded lightweight, high-density hydrogen storage tanks for hydrogen fuel cell vehicles. The lighter weight and higher pressure attributes also make them attractive for stationary applications where weight and/or space must be minimized.

[7] http://www.alspecialtygases.com/Prd_high-pressure_steel.aspx

(a) (b) (c)

Figure 9
(a) Cutaway of composite cylinder bulk pack
(b) arrangement of composite cylinders in trailer from Figure 8 (b) above
(c) composite cylinder installed in a wheeled cart to facilitate rooftop delivery.

Photos courtesy HTEC (a) and GTM Technologies (b and c)

5.1.2.2 Liquid Hydrogen

Transportation and storage of liquid hydrogen is an economical option for applications where large amounts of hydrogen are consumed. As a fuel cell requires hydrogen in gaseous form, additional infrastructure is needed at, or near, the point of consumption to convert liquid hydrogen to gaseous hydrogen. At atmospheric pressure, hydrogen exists as a liquid below 33 K, but must be cooled to about 20 K (-253°C / -424°F) to exist in liquid state without evaporating. Storage and handling procedures for cryogenic liquids must be employed.

Liquid hydrogen is transported by trailer trucks in large cryogenic tanks ranging in capacity from 7,500 to 13,000 gallons (28,400 to 49,200 L), which equates to about 2,000 to 3,500 kg of hydrogen. An example is shown below of a cryogenic tanker trailer. as well as a liquid hydrogen storage and gasification facility at a site employing a fleet of fuel cell forklift trucks. The additional capital required for storage and gasification of the liquid hydrogen is economical in warehouse facilities that deploy at least 40 fuel cell forklift trucks. Although not common today, there may be applications where liquid hydrogen is economical for stationary fuel cells that produce large amounts of power and/or experience heavy use.

(a) (b)

Figure 10.
(a) Liquid hydrogen transport tank[8]
(b) liquid hydrogen storage and gasification facility at a warehouse deploying a fleet of fuel cell forklifts[9]

Photos courtesy Plug Power, Inc.

[8] http://hydrogentank.en.busytrade.com/products/info/2087771/Liquid-Hydrogen-Transport-Truck-Tank.html
[9] http://www.plugpower.com/Libraries/Documentation_and_Literature/Whitepaper_Debunking_Hydrogen_Fuel_Cell_Myths.sflb.ashx

5.1.2.3 Advanced Hydrogen Storage Technologies

Many new technologies are being developed for hydrogen storage, motivated primarily by the growing number of hydrogen applications, including hydrogen fuel cell power generation. These new technologies include, for example, metal hydrides, ammonia, formic acid, and carbon nanotubes, to name just a few. As these technologies are in the development stage, they are not included here as commercial options at time of publication, but industry is moving quickly.

5.1.3 Refueling

Hydrogen is refueled either by replacing or refilling the storage container.

5.1.3.1 Storage Container Replacement

For hydrogen storage cabinets designed for cylinder swapping, individual cylinders are delivered to the site by truck, and technicians move the cylinders to and from the storage location with hand trucks. In some cases, bulk solutions are designed to be "drop-and-swap," allowing a large amount of hydrogen to be replaced in a short period of time if the site area is large enough to accommodate the heavy equipment required.

(a) (b)

Figure 11.
(a) Hand-truck for moving individual cylinders to and from storage location[10]
(b) "drop-and-swap" of a bulk container of composite cylinders.

Photos courtesy HTEC

5.1.3.2 Storage Container Refilling

Compressed hydrogen storage systems can be designed to be "fill-in-place," allowing refueling from a truck through a hose. This model avoids wasting any hydrogen remaining in cylinders that are swapped, and as well allows heavy fuel storage vessels to remain in place. This model is suitable for accessible sites in regions where there are trucks equipped to refill cylinders at high pressure.

[10] http://h2bestpractices.org/storage/compressed_gas/storage_vessels/cylinderhandling.asp

(a)

(b)

Figure 12
(a) Fill-in-place delivery by a hydrogen bobtail truck to compressed hydrogen storage at a cellular site[11]
(b) fill-in-place delivery by composite bulk storage cylinders on a trailer.

Photos courtesy GTM Technologies

Liquid hydrogen storage tanks are always refilled (as opposed to swapped), and refueling must be done with attention to cryogenic procedures. For a fuel cell application, stored liquid hydrogen must be converted to gaseous form before it can be used by the fuel cell.

5.1.4 Site Considerations

For ground-based sites, replacement and refilling modes are both viable options for refueling gaseous hydrogen. The refilling mode is desirable as it avoids moving heavy storage containers; however, site accessibility can limit its use. Although a slower and more labor intensive mode of refueling, cylinders can be moved safely by hand-cart through spaces that cannot be navigated by a vehicle.

For rooftop sites, replacement and refilling modes are both viable options, but more challenging than for ground-based sites. It is assumed in both cases that the hydrogen storage is on the roof with the fuel cell, as there often is no suitable space available around the building at ground level or inside the building. For the fill-in-place mode, if allowed by the building owner, hydrogen piping can be installed from the storage tanks down the outside of the building to ground level where the delivery truck can connect a refilling hose. For the replacement mode, cylinders (steel or carbon composite) can be taken up an elevator, after which there may be some stairs to roof level. During a power outage or other times when elevators are not operational, cylinders can be carried with a cylinder hand-truck up the stairwell if the building is not too tall.

For both ground-based and rooftop sites, compressed gas fuel such as hydrogen is almost always stored separately from the fuel cell cabinet, so compressed gas fuel cell systems tend to have a larger physical footprint compared to liquid-fueled systems, where fuel can be stored in the base of the fuel cell enclosure. Storing hydrogen in higher pressure carbon composite tanks can help to reduce the footprint required for fuel.

Taking appropriate setback distances into account for hydrogen storage, the effective footprint (i.e., the physical occupied footprint plus the clearance area required for regulatory compliance) of the hydrogen solution tends to be the largest of available options.

Hydrogen is a very safe fuel for use on a rooftop, as it is the most buoyant of all gases (relative density of 0.0693 relative to air), and disperses quickly (diffusion coefficient[12] of

[11] http://www.hydrogen.energy.gov/pdfs/review12/h2ra006_maxwell_2012_p.pdf
[12] http://www.hysafe.org/download/997

0.61 x 10-4 m^2/s, compared to gasoline diffusion coefficient range[13] of 0.006 – 0.02 x 10-4 m^2/s). In the unlikely event of a leak, hydrogen rises straight up into the open air and rapidly dilutes to noncombustible concentrations. The lower flammability limit (LFL) of hydrogen is 4 percent,[14] which is higher than the LFL of gasoline at 1.2 percent.[15]

5.2 Methanol

The methanol/water mixture used in fuel cells exists naturally as a liquid at room temperature and atmospheric pressure, and typical blends freeze at around -73°C (-100°F). As it is a stable liquid, it can be transported and stored in plastic or metal containers, making fuel logistics simple. Methanol can be used directly, for example, by DMFC and SOFC systems, or indirectly, for example, by PEM fuel cells with a suitable reformer.

5.2.1 Sources

Pure methanol is one of the most widely distributed chemicals in the world. It is used in numerous products such as windshield washer fluids, automotive fuels, furniture refinisher, paint remover, windshield deicer, and household cleaners/solvents, as examples. The water in the methanol/water mix must be purified and de-ionized before blending with methanol at the prescribed ratio.

5.2.1.1 Methanol Sources

Methanol with the required degree of purity can be obtained from many sources worldwide. Please see, for example, the list of member companies of the Methanol Institute (http://www.methanol.org/about-us/member-companies.aspx).

5.2.1.2 Renewable Sources

Methanol can be produced renewably and sustainably through conversion of bio-mass. For example, BioMCN,[16] a company in the Netherlands, produces and sells industrial quantities of "bio-methanol" that is chemically equivalent to methanol manufactured conventionally and meets International Methanol Producers and Consumers Association (IMPCA) standards. The process implemented by BioMCN converts crude glycerine, a residue from biodiesel production, into bio-methanol. The product is either shipped to consumers of the chemical, or alternatively, BioMCN has established a certificate trading system whereby the sustainability rights of the bio-methanol produced by BioMCN in the Netherlands are transferred to a chemical consumer, while the chemical consumer sells an equivalent amount of conventional methanol back to BioMCN. The certificate trading system saves freight costs and avoids unnecessary production of CO_2 by transport of bio-methanol.

5.2.1.3 Methanol/Water Blenders

To prepare a pre-blended fuel, the fuel supplier is responsible for sourcing methanol, sourcing or producing water, and blending them so that the final product meets the requirements of the fuel cell.

One such company supplying methanol/water fuel under the brand name HydroPlus™[17] is Brenntag Pacific, which can distribute the blended product throughout North America.[18] The HydroPlus mixture is between 61

---

[13] http://www.jocet.org/papers/012-J30011.pdf
[14] Hydrogen density and LFL from http://www.hysafe.org/download/997
[15] https://www.mathesongas.com/pdfs/products/Lower-(LEL)-&-Upper-(UEL)-Explosive-Limits-.pdf
[16] http://www.biomcn.eu/
[17] HydroPlus™ is a trademark of Ballard Power Systems, Inc.
[18] http://www.brenntagpacific.com/en/

percent and 63 percent methanol by weight, approximately 70 percent methanol by volume. Other blending ratios may apply to specific products or as required by local authorities.

5.2.2 Fuel Delivery/Storage Options

Generally, there are two methods for delivery of fuel: (a) to deliver pre-blended fuel, or (b) to deliver pure methanol. In the latter case, blending with water can be performed on site before transfer to the fuel storage tank, or it may be blended internally within the system if the site can provide its own water. Note that care must be taken to ensure that the methanol and water or the methanol/water blend meet the quality and methanol/water ratio requirements of the particular fuel cell equipment.

With either form of delivery, the storage medium for the fuel is very commonly a fixed tank that remains on site. The tank may be internal — located within the envelope of the fuel cell solution, or external — located outside the envelope of the fuel cell solution, but nearby.

(a) (b)

Figure 13
(a) Internal methanol/water tank (part of base)
(b) external tank supplying three 5-kW fuel cells electrically connected in parallel.

Photos courtesy Ballard Power Systems, Inc.

Fuel can be delivered to the fixed tank in a variety of transportable container sizes.

(a) (b) (c) (d)

Figure 14
(a) 275- or 330-gallon intermediate bulk container (IBC) totes
(b) 55-gallon drums (four per pallet)
(c) 5-gallon pails
(d) 1-gallon jugs.

Photos courtesy Ballard Power Systems, Inc.

Alternatively, the external fuel tank can be swapped out, similar in concept to hydrogen cylinder swapping. An IBC tote can be used for this mode of delivery. Common IBC capacities are 275 gallons (1,040 L) and

330 gallons (1,250 L). Unlike the more common cylinder swapping for hydrogen fuel cells, this method of fuel delivery is less common for methanol/water fuel cells. The tank can be swapped while the fuel cell is inactive or, to avoid loss of availability, the tank may be hot-swapped with one or more other tanks on a manifolded fuel supply.

5.2.3 Refueling

Once delivered to the site, the methanol/water fuel can be transferred to the storage tank by a variety of mechanisms:

- Fuel in smaller containers (1-gallon jugs and 5-gallon pails) can be poured directly into the fuel tank with an appropriate spout or funnel to avoid spillage.
- Fuel in larger containers (55-gallon drums and larger IBC totes) can be pumped out with AC- or DC-powered pumps, hand pumps or siphons, or tanker trunk with a hose.

(a) (b) (c)

Figure 15
(a) AC-powered pump
(b) hand pumps and a jiggle siphon
(c) fuel delivery system in pickup truck with extendable hose

Photos courtesy Ballard Power Systems, Inc.

5.2.4 Site Considerations

For ground-level sites, methanol fuel can be delivered and dispensed easily from containers such as drums or pails or directly from a fixed-tank fuel truck if the truck can get close enough to the site that it can be reached by hose.

For rooftop sites, liquid methanol/water fuel can be transported by elevator in drums, pails, or jugs to the top floor, after which there may be stairs to the roof level. During a power outage or at other times when elevators are not operational, fuel can be carried up the stairwell in pails or jugs, whichever is more manageable for the service personnel.

As a liquid fuel, methanol/water has a higher energy density than a gaseous fuel, and thus occupies less volume and can be integrated into the fuel cell cabinet, reducing the physical footprint. For quantities less than 60 gallons,[19] there are no setback requirements, so the effective footprint can be very small, which is particularly advantageous for rooftops where available area is scarce and expensive.

The LFL of methanol is higher (6.7 percent[20] by volume) than the LFL of all the other fuels considered here (see Table 1), meaning that more of it needs to accumulate before it can ignite. Methanol vapor density is

[19] NFPA 30, Chapter 21
[20] http://www.engineeringtoolbox.com/explosive-concentration-limits-d_423.html

slightly heavier than air (1.11[21]), but it disperses (with a diffusion coefficient[22] of 0.15 x 10-4 m^2/s, compared to the gasoline diffusion coefficient[23] range of 0.006-0.02 x 10-4 m^2/s) 50 percent faster than propane and similar to natural gas. The volatility of methanol is relatively low (32 kPa[24] Reid vapor pressure (RVP) versus 48–62 kPa RVP for gasoline[25]). Methanol's relatively neutral buoyancy in air, low volatility, and higher dispersion relative to propane and gasoline, and its flammability only at high concentrations, are properties that contribute to its safety in general, and particularly for use on rooftops.

5.3 Propane

Propane or liquid (or liquefied) petroleum gas (LPG) is a hydrocarbon that is widely distributed in a variety of containers. In the United States, propane is available in three grades: HD5, HD10, and Commercial, where the constituents vary amongst the three grades:

- HD5: At least 10 percent pure propane, and no more than 5 percent propylene and no more than 5 percent butane/methane. All residential propane service is HD5, and it is also commonly used in vehicles. Defined by GPA 2140: http://standards.globalspec.com/std/699115/gpa-std-2140
- HD10: Can contain up to 10 percent propylene, which can lead to some engine components sticking. "HD10" means fuel that meets the specifications for propane used in transportation fuel found in Title 13, California Code of Regulations, section 2292.6.
- Commercial: Less controlled mixture of propylene, butane, and methane; not used in vehicles.

The HD5 fuel grade is preferred for fuel cells.[26] It can be used directly, for example, by SOFC systems, or indirectly, for example, by PEM fuel cell systems with a suitable reformer.

5.3.1 Sources

There are many propane dealers throughout the United States. Check local directories to find propane dealers that offer HD5-grade propane fuel.

5.3.2 Fuel Delivery/Storage Options

Propane is already being used at cellular sites to fuel combustion-engine generators, and the propane is stored in tanks most commonly external to the generator, but sometimes within the generator enclosure. Fuel is delivered by bobtail truck to refill the tanks. The tank must be placed where it can be accessed by the delivery truck. At sites where less energy is required (less required power and/or operating time), a smaller replaceable tank may be used instead of a fixed refillable tank.

[21] http://www.epa.gov/chemfact/s_methan.txt
[22] http://www.gsi-net.com/en/publications/gsi-chemical-database/single/343.html
[23] http://www.jocet.org/papers/012-J30011.pdf
[24] https://www.mathesongas.com/pdfs/products/Lower-(LEL)-&-Upper-(UEL)-Explosive-Limits-.pdf
[25] http://www.epa.gov/otaq/fuels/gasolinefuels/volatility/standards.htm
[26] http:/www.propanecouncil.org/uploadedFiles/REP_11071%20Propane%20Issues%20for%20Fuel%20Cell%20Assessment%20Vol1(1).pdf

(a)

(b)

Figure 16
(a) Vertical swappable propane tank[27]
(b) Large-capacity horizontal fixed propane tank at cellular site[28]

Photos courtesy of Photobucket (a), H.C. Olsen Construction (b)

5.3.3 Refueling

At ambient temperatures, propane exists as a liquid only under pressure, so special nozzles and tank hardware are required for the transfer of fuel to a tank. Examples of bulk propane tank valves and gauges are illustrated below, showing that both the liquid and vapor phases of propane must be taken into consideration during refilling.

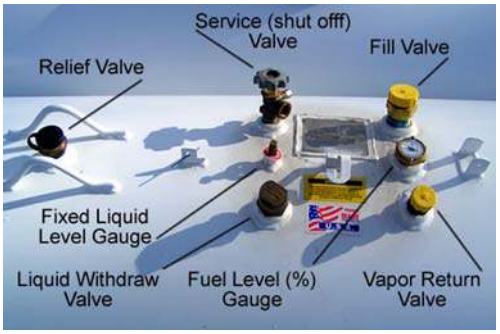

Figure 17 Propane tank valves and gauges

Photo courtesy Signature Propane

5.3.4 Site Considerations

For ground-level sites, propane tanks can be swapped, or the fuel can be dispensed directly from a propane bobtail truck if the truck can get close enough to the site that it can be reached by hose.

For rooftop sites, propane can be transported by elevator in smaller tanks, after which there may be some stairs to the roof level. During a power outage or at other times when elevators are not operational, fuel can be carried up the stairwell in tanks sized to be manageable for the service personnel.

As propane exists as a liquid under pressure, propane has a higher energy density than a gaseous fuel, and thus occupies less volume. The fuel tank is often external to the system, adding to the physical footprint; however, the high energy content and volumetric density of propane enable long run times in a relatively small fuel storage space. No setback requirements apply to tanks smaller than 125 gallons[29]; however, in prime power applications, larger tanks are desirable to reduce the frequency of refueling visits.

---

[27] http://i712.photobucket.com/albums/ww125/TheBucketGuy/Propane/PropaneTank.jpg
[28] http://www.hcolsen.com/wireless.html
[29] NFPA 30, Chapter 21

Propane vapor is heavier than air (1.56 relative density[30]), so propane vapor tends to pool and to not disperse well (diffusion coefficient[31] of 0.10 x 10-4 m^2/s, compared to gasoline diffusion coefficient[32] range of 0.006–0.02 x 10-4 m^2/s). The LFL of propane is comparable (2.1 percent[33] by volume) to the LFL of gasoline. Leaks are in gaseous form, as propane cannot exist in liquid form at atmospheric pressure.

In practice, propane systems can be difficult to site on rooftops for the same reason gasoline combustion-engine generators are not permitted on rooftops: the safety concerns of heavier-than-air vapors, low LFL, and high volatility are similar. Propane is common for residential and commercial use, and siting propane systems is straightforward for ground-based installations.

5.4 Natural Gas

Natural gas is a common fuel with residential, commercial, and industrial service for heat and power generation. If it is available in piped form, power can be generated for as long as gas is supplied in the pipes. Natural gas can be used directly, for example, by molten carbonate fuel cell (MCFC), phosphoric acid fuel cell (PAFC), and SOFC systems, or indirectly, for example, by PEM fuel cell systems with a suitable reformer.

5.4.1 Sources

Natural gas is widely available throughout the United States, predominantly delivered by pipe infrastructure, but also available in compressed gas cylinders.

5.4.2 Fuel Delivery/Storage Options

Piped natural gas does not need on-site fuel storage, as it is dispensed on demand from piped infrastructure. The local gas company supplying the fuel must verify that the service is compatible with the fuel cell in terms of pressure and available flow rate.

As with hydrogen, natural gas can be stored and transported as a compressed gas in high-pressure cylinders; however, this mode of storage/delivery is used predominantly by motive applications. For stationary applications, if piped natural gas is not available, and if there are no issues with siting, propane is used instead.

5.4.3 Refueling

As referenced above, piped natural gas does not need on-site fuel storage, so no refueling equipment is required. The supply of fuel continues as long as it is available from the gas supplier. Although piped fuel obviates the need to visit sites to deliver fuel, the security of the gas supply is out of the control of the gas consumer.

5.4.4 Site Considerations

As no fuel needs to be transported, there are no special transportation considerations for rooftop sites relative to ground-level sites.

Piped natural gas can be used both at ground-based sites and rooftop sites, as long as the infrastructure is available, and the building owner and local authorities allow it; however, natural gas infrastructure is often present only in residential and commercial buildings, so natural gas is a good option for rooftops, but simply may not be available at standalone ground-based telecom sites. If natural gas service is available, consulta-

[30] http://www.engineeringtoolbox.com/gas-density-d_158.html
[31] http://cafr1.com/Hydrogen_vs_Propane.pdf
[32] http://www.jocet.org/papers/012-J30011.pdf
[33] http://www.engineeringtoolbox.com/explosive-concentration-limits-d_423.html

tion with the gas company and landlord is advised to ensure that: (a) the gas service meets the pressure/flow-rate requirements of the fuel cell, and (b) the landlord/other tenants agree to share the gas supply.

Natural gas is lighter than air (0.55 methane/air relative density[34]), and its dispersion rate (diffusion coefficient[35] of 0.16 x 10^{-4} m^2/s, compared to gasoline diffusion coefficient[36] of 0.006–0.02 x 10^{-4} m^2/s) is comparable to that of methanol vapor. Natural gas leaks tend to rise in air and disperse 8 to 27 times faster than gasoline. The LFL of methane (the principal constituent of natural gas) is slightly lower (5 percent[37] by volume) compared to that of methanol and higher than the LFL of gasoline and propane. The high buoyancy of natural gas, coupled with its relatively high LFL and good dispersion properties are factors that contribute to its safety.

5.5 Fuel Comparison

Some properties of hydrogen, methanol/water, propane, and natural gas for fuel cells are compared in the table below. The data reflect information at time of publication.

Footprint vs. operating time with a 5-kW load is shown below for six different potential fuel options:

1) Hydrogen fuel cell, 8 cylinders, 300-series steel, 2,400 psi, swappable
2) Hydrogen fuel cell, 16 cylinders, large steel, 3,000 psi, fill-in-place cabinet
3) Hydrogen fuel cell, 8 cylinders, 90 L carbon composite, 5,000 psi, fill-in-place cabinet
4) Hydrogen fuel cell with methanol/water reformer, 59 gallon internal tank (located within fuel cell enclosure under fuel cell equipment – no incremental footprint for fuel)
5) Hydrogen fuel cell with methanol/water reformer, 275 gallon Intermediate Bulk Container external tank
6) Propane fuel cell with propane reformer, 125 gallon propane tank.

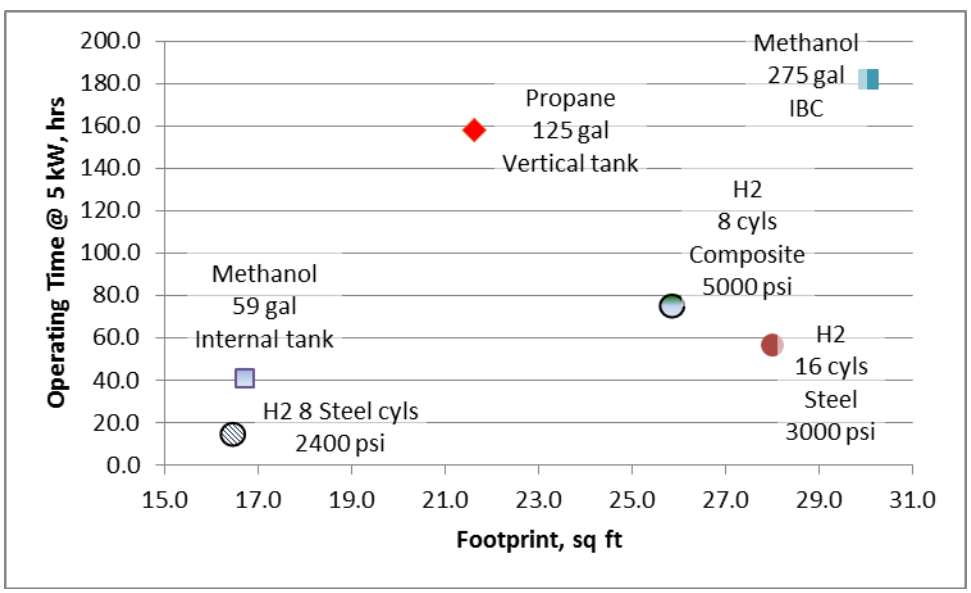

Figure 18
Comparison of footprint vs. operating time with 5-kW load for six different fuel cell systems.

[34] http://www.engineeringtoolbox.com/gas-density-d_158.html
[35] http://cafr1.com/Hydrogen_vs._Propane.pdf
[36] http://www.jocet.org/papers/012-J30011.pdf
[37] http://www.engineeringtoolbox.com/explosive-concentration-limits-d_423.html

Table 1. Comparison of Fuel Attributes

	Hydrogen	Methanol/Water	Propane	Natural Gas
Small fuel cell status[38]	Commercial	Commercial	Early commercial	Early commercial
Fuel cell module size[39]	0.2-10 kW	0.3-7.5 kW	0.25-5 kW	0.25-5kW
Small fuel cell vendors	Many	Few	Few	Few
Typical usage	Backup power	Backup power	Prime power	Prime power
Fuel state	Compressed gas	Stable liquid	Liquid under pressure	Compressed gas
Density relative to air[40]	0.0693	1.11	1.56	0.55
Lower flammability limit[41]	4 percent	6.7 percent	2.1 percent	5 percent
Reid vapor pressure[42]	n/a (gas)	32 kPa	n/a (gas)	n/a (gas)
Diffusion relative to gasoline[43]	30x-102x faster	7.5x-25x faster	5x-17x faster	8x-27x faster
Mode of transport	Steel or composite cylinders	Plastic or metal totes, drums, pails, jugs	Portable tanks or bobtail truck	Piped infrastructure
Mode of storage	Steel or composite cylinders	Integrated tank or external metal tank	Integrated tank or external pressurized tank	n/a
Mode of refueling	Cylinder swap or fill-in-place	Pour or pump liquid	Swap tanks or refill with propane-specific nozzles/valves	No refueling – direct feed from piped infrastructure
Common sources of fuel (who to call)	Industrial gas companies	Methanol/water blenders (e.g., Brenntag North America)	See local directory for propane distributors	Determine supplier of gas to a specific site
Minimum quality	99.95 percent industrial-grade hydrogen	Methanol: IMPCA specifications; Water: ASTM 1125, ASTM D5907, IMPCA 004-08, ASTM D4517; 61 percent-63 percent methanol by weight	HD5	Contact gas company/landlord to assure adequate pressure and flow rate for application
Ground-based site considerations	Suitable given sufficient space for fuel storage respecting setback limits	Integrated tank less than 60 gallons allows deployment in tight spaces	Suitable given sufficient space for fuel storage	May not find natural gas service at all ground sites
Rooftop-based site considerations	Safe given hydrogen properties; fuel logistics challenging, especially when elevator not available	Safe given methanol properties; liquid fuel simplifies fuel logistics – delivering to site and carrying up to roof	May be challenges due to properties of propane; small tank delivery enables service to roof when elevator not available	If natural gas service available, no site visits required for fuel delivery; current architectures more suitable for prime power than backup power

[38] "Commercial" means products that are available for sale in meaningful numbers, are supported with service and spare parts, and have evidence of deployment in significant numbers. "Early Commercial" means products that are available for sale, but no evidence exists yet of deployment in significant numbers.

[39] Modules can be cascaded for higher site power requirements.

[40] For reference, typical gasoline density is 3-4 relative to air: http://tsocorp.com/wp-content/uploads/2012/12/Gasoline-Unleaded-Regular.pdf

[41] For reference, compare to typical gasoline LFL of 1.2 percent: https://www.mathesongas.com/pdfs/products/Lower-(LEL)-&-Upper-(UEL)-Explosive-Limits-.pdf

[42] For reference, compare to typical gasoline RVP of 48-62 kPa: http://www.epa.gov/otaq/fuels/gasolinefuels/volatility/standards.htm

[43] For reference, diffusion coefficient of gasoline ranges from 0.006-0.02x10-4 m2/s: http://www.jocet.org/papers/012-J30011.pdf

6 Permitting Process

The permitting process is actually several processes typically involving multiple permits and agencies. The processes are in place to protect public safety, public health, and the environment. An example of the permits, agencies, and purposes for these multiple permitting processes is shown in Table 2.

Table 2. Fuel Cell Permitting/Potential Permits Required

Permit	Agency	Permit/Permit Scope
Construction	Building Department	Permit to Construct General/Address safety construction issues
Drainage	Engineering Department	Permit to Construct Drainage/Modification to sewer drainage
Site grading	Engineering Department	Permit to Construct Grading/Modification to site elevation
Electrical	Building/Electrical Department	Electrical Permit/Modification to electrical service
Demolition	Building Department	Construction Permit/Demolish structures required for dispenser construction
Food services	Health Department	Food sales
Air emission impacts	South Coast Air Quality Management District (SCAQMD)	Air Quality Permit or No impact declaration
Fire safety	Fire Department Plans Review Office	Fire Safety Permit/General fire code compliance

The permitting processes can be broken down into seven stages that help define the overall process and the timeline for completing all the required components.

1) Preliminary project scoping
2) Facility design
3) Approval process
4) Facility construction
5) Facility startup
6) Facility operation
7) Facility maintenance

The required permits address all these phases, but the permitting structure does not correlate on a one-to-one basis with the chronological steps required to build and operate a fuel cell. Tables 2 and 3 list elements of the permitting and approval processes for an sample project located in California. The difference between these tables is that there are regulatory agencies that typically issue a permit after the applicant has shown compliance with requirements and agencies that approve of an applicant's submission without issuing a permit.

Table 3. Fuel Cell Approvals

Approval	Agency	Approval Scope
California Environmental Quality Act (CEQA) or similar regional environmental requirement (see overview of CEQA attached at the end of this document)	Self-enforcing	CEQA approval or finding of no significant impact/ environmental agency having jurisdiction
Zoning	Local zoning board	Zoning approval/allows construction and operation at defined location
California Accidental Release Prevention Program (CAL-ARP) (or similar local accidental release program)	Local administering agency (for example county health or fire department) and U.S. EPA	Approved submission or finding of non-applicability/ requires an evaluation of the impact of the release of a regulated materials from the site and a plan in the event of a release

6.1 The Permit Application

The administrative process for reviewing and approving projects may vary by jurisdiction, but there are common elements. These basic elements are as follows:

1) Pre-submittal review and feedback (optional but highly recommended)
2) Review and feedback to applicant
3) Formal submission of application
4) Public meeting (on an as-needed basis determined by both administrative law and the jurisdiction's determination as to whether public input should be solicited)
5) Make adjustments in the permit application (as needed) based on public input
6) Review of modified application and feedback to application
7) Resubmittal of modified application
8) Issuance of permit
9) Project construction
10) Site inspection to determine that project built as shown in final design plans
11) Periodic inspections to determine ongoing compliance.

The pre-submittal review, although not typically required, is a critical step in this process. It is at this time that significant problems could be identified and potentially averted. Examples of problems that could be averted are:

1) Identification of problems at the proposed site that the applicant is not aware of
2) Identification of requirements the project must meet that the applicant had not evaluated in the draft application
3) Any history of issues with similar projects in the jurisdiction.

6.2 Detailed Codes and Standards Requirements

Compliance notes:

1) Fuel cell power systems (power generators) do not require third-party safety certification per OSHA (Code of Federal Requirements 29, Section 1910) directives.

2) The International Mechanical Code Section 924 Stationary Fuel Cell Power Systems requires testing to ANSI/CSA FC1, and installation per NFPA 853 (for systems <10 MW output).

3) NFPA 2 and NFPA 853 require safety certification (listing) to ANSI /CSAFC1 for AHJ approval (permit) of the installation.

4) NFPA 2 references and repeats hydrogen safety code requirements from other NFPA standards. State adoption of NFPA 2 is limited to California at this time, but is being considered by other state legislatures for incorporation into state codes. Requirements for NFPA 2 are provided here for reference – to provide if an AHJ chooses to invoke it

   NFPA 853 is used for the fuel cell power system installation.
   NFPA 55 is used for the compressed and flammable gas fuel (e.g., hydrogen).
   NFPA 30 is used for flammable liquid fuel (e.g., methanol) per the ICC and incorporated into state laws.

5) **It is the responsibility of the fuel cell power system manufacturer to prove compliance to all legal requirements prior to deploying these products into telecom applications.**

Certified approval to (listing) to ANSI/CSA FC1 is provided by a National Recognized Testing Laboratory (NRTL) in the United States.

OSHA has established the NRTL program in compliance with 29CFR 1910.7 for U.S. third-party certification of products to safety standards.

For a list of approved NRTLs and details of the program, refer to https://www.osha.gov/dts/otpca/nrtl/index.html.

6.2.1 Compliance requirements identified for each subject category.

- Noise (Sound Level Exposure Limit):
  - Average A-weighted sound (noise) level limit of 76 dBA at 7 ± 0.1 meter (23 ± 0.3 ft) per ANSI S1.4, S1.13, S1.23, and/or other nationally recognized noise emission regulation. [FC 1-2014 4.4.12]

6.2.1.1 Definitions

- **Class A** for industrial/commercial (non-residential), **Class B** for residential;
- Fuel Cell System defined as a complete aggregate of equipment used to convert chemical fuel into usable electricity; with power conditioners and auxiliary equipment; including a reformer if present. [NFPA70-2019 692.2]
- Classification of Locations:
  - » Class I locations (i.e., Division 1, Division 2; flammable concentrations likely to ignite) same as 29CFR1910.307.
  - » Class I Group Classifications (flammable gas or vapor): [NFPA70-2019 500.6]

- Group B: (hydrogen)
- Group C: (ethylene)
- Group D: (propane, methane, methanol, ethanol)

6.2.1.2 Components and Systems Certifications

In compliance with 47CFR Part 15, fuel cell power systems are electrical generators and require verification testing by a test laboratory accredited by the National Voluntary Laboratory Accreditation Program (NVLAP), the American Association of Laboratory Accreditation (A2LA), or an accredited laboratory designated by the Commission under the terms of a negotiated Mutual Recognition Agreement (MRA).

For information on FCC-approved laboratories:
https://apps.fcc.gov/oetcf/eas/reports/TestFirmSearch.cfm

Compliance is mandated in the United States by federal law. per 47CFR Part 15—Radio Frequency Devices–Subpart B: Unintentional Radiators.

- Radiated and AC conducted RF emission limits by type of application/installation
- Limits per 47CFR15.107 & 109.

Following a successful test with report from the accredited laboratory, the manufacturer issues a Declaration of Conformity (DoC) for each model successfully tested. A successful test report from the accredited laboratory meets the requirements for verification testing and the DoC is the manufacturer's resulting claim for compliance.

- Compliance is required per model number
- Be rated for the class of installation
- Must carry the FCC logo and warnings on the nameplate and on the inside cover of the product manuals per 47CFR15.19(a)(3)
- Fuel cell system shall be evaluated and listed for its intended application prior to installation. [NFPA70-2017 692.6]
- NFPA 70® National Electrical Code®-2014 edition, specifically, Article 692 Fuel Cell Systems

Listing:

- Requires listing (certified approval) of the stationary fuel cell power system to ANSI/CSA FC1 [NFPA853-2015 4.2 & 4.3]
- Requires listing (certified approval) of the stationary fuel cell power system to ANSI/CSA FC1 [NFPA2-2016 12.3.1.1.1.1]
- Modular (engineered and field-constructed) systems require a fire risk evaluation by a registered engineer or AHJ-acceptable third party. [NFPA853-2015 4.4]
- Modular (engineered and field-constructed) systems shall meet intent of ANSI FC1 [NFPA2-2011 12.3.1.1.2.1]

NOTICE OF DISCLAIMER AND LIMITATIONS OF LIABILITY

Telecommunications Industry Association

Headquarters
1320 N. Courthouse Rd.
Suite 200
Arlington, VA 22201
USA
Phone: +1.703.907.7700
Fax: +1.703.907.7727

Affiliate Office
United States Information Technology Office (USITO)
Room 516
Beijing Fortune Plaza Office Tower
7 East Third Ring Middle Road
Chaoyang District
Beijing, 100020
People's Republic of China
Phone: +86.10.6530.9368/69/70
Fax: +86.10.6530.0367
usito.org
usito@usito.org

ADVANCING GLOBAL COMMUNICATIONS

tiaonline.org